Orangutan SV-328 Schematic Diagram
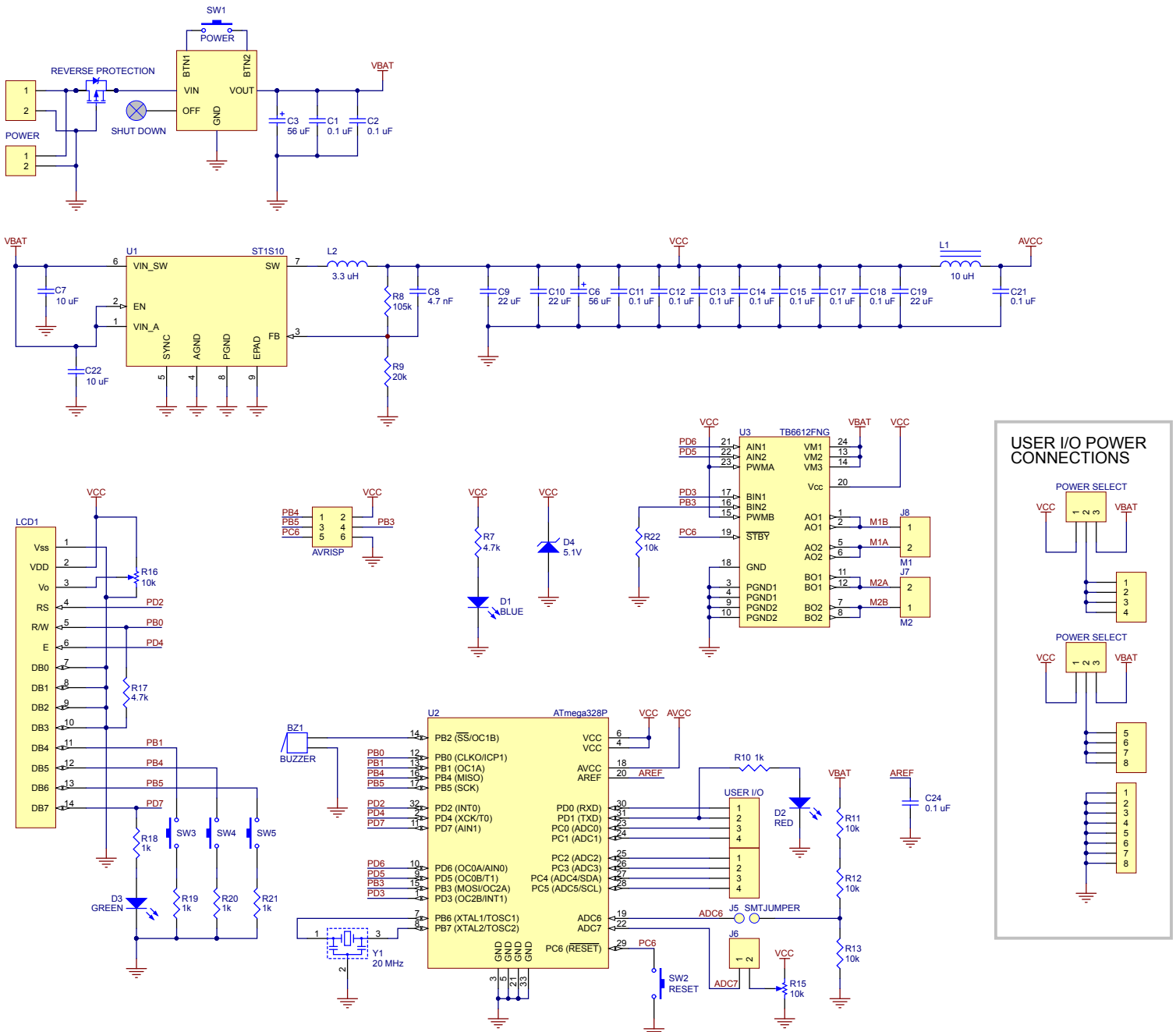
©2013 Pololu Corporation
www.pololu.com