A-Star 32U4 Micro
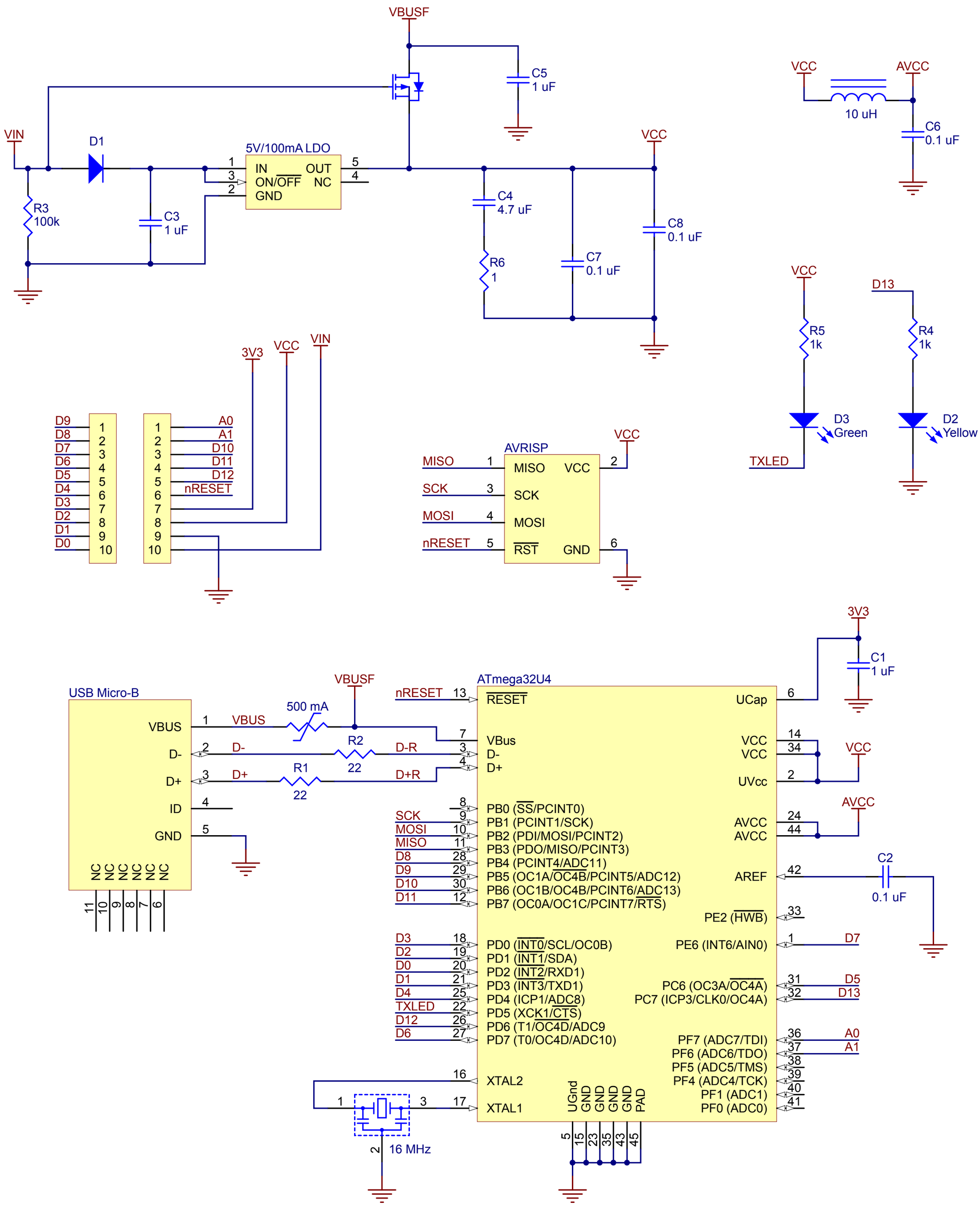
©2014 Pololu Corporation
www.pololu.com