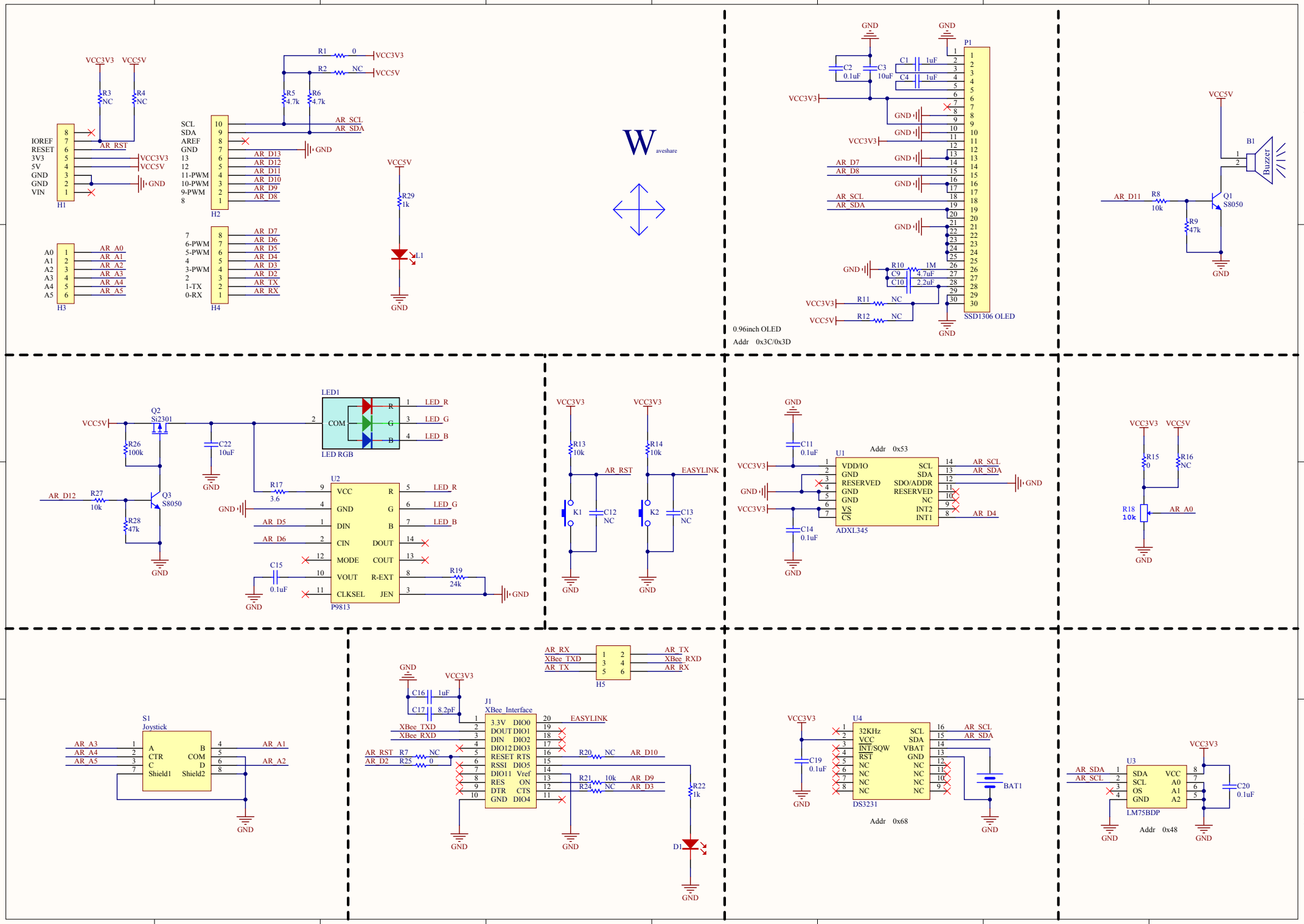
VCC3V3
VCC5V
R3 NC
R4 NC
IOREF
RESET
3V3
5V
GND
GND
VIN
H1
AR_RST
VCC3V3
VCC5V
GND
R1 0
R2 NC
R5 4.7k
R6 4.7k
SCL
SDA
AREF
GND
13
12
11-PWM
10-PWM
9-PWM
8
H2
AR_SCL
AR_SDA
GND
AR_D13
AR_D12
AR_D11
AR_D10
AR_D9
AR_D8
A0
A1
A2
A3
A4
A5
H3
AR_A0
AR_A1
AR_A2
AR_A3
AR_A4
AR_A5
7
6-PWM
5-PWM
4
3-PWM
2
1-TX
0-RX
H4
AR_D7
AR_D6
AR_D5
AR_D4
AR_D3
AR_D2
AR_TX
AR_RX
VCC5V
R29 1k
L1
GND
W
aveshare
GND
GND
C2 0.1uF
C3 10uF
C1 1uF
C4 1uF
P1
VCC3V3
GND
VCC3V3
AR_D7
AR_D8
AR_SCL
AR_SDA
R10 1M
C9 4.7uF
C10 2.2uF
R11 NC
R12 NC
SSD1306 OLED
0.96inch OLED
Addr 0x3C/0x3D
VCC5V
B1
Buzzer
AR_D11
R8 10k
Q1 S8050
R9 47k
GND
VCC5V
Q2 Si2301
R26 100k
C22 10uF
GND
AR_D12
R27 10k
Q3 S8050
R28 47k
GND
LED1
COM
R
G
B
LED_R
LED_G
LED_B
LED RGB
R17 3.6
U2
VCC
GND
DIN
CIN
MODE
VOUT
CLKSEL
DOUT
COUT
R-EXT
JEN
P9813
AR_D5
AR_D6
C15 0.1uF
R19 24k
GND
VCC3V3
VCC3V3
R13 10k
R14 10k
AR_RST
EASYLINK
K1
K2
C12 NC
C13 NC
GND
GND
GND
C11 0.1uF
U1
Addr 0x53
VDD/IO
GND
RESERVED
GND
GND
VS
CS
SCL
SDA
SDO/ADDR
RESERVED
NC
INT2
INT1
ADXL345
C14 0.1uF
AR_D4
VCC3V3
VCC5V
R15 0
R16 NC
R18 10k
AR_A0
GND
S1
Joystick
A
CTR
C
Shield1
B
COM
D
Shield2
AR_A3
AR_A4
AR_A5
AR_A1
AR_A2
GND
AR_RX
XBee_TXD
AR_TX
H5
AR_TX
XBee_RXD
AR_RX
GND
VCC3V3
C16 1uF
C17 8.2pF
J1
XBee_Interface
3.3V
DOUT
DIN
DIO12
RESET
RSSI
DIO11
RES
DTR
GND
DIO0
DIO1
DIO2
DIO3
RTS
DIO5
Vref
ON
CTS
DIO4
XBee_TXD
XBee_RXD
EASYLINK
AR_RST
AR_D2
R7 NC
R25 0
R20 NC
AR_D10
R21 10k
R24 NC
AR_D9
AR_D3
R22 1k
D1
GND
GND
GND
VCC3V3
C19 0.1uF
U4
32KHz
VCC
INT/SQW
RST
NC
NC
NC
NC
SCL
SDA
VBAT
GND
NC
NC
NC
NC
DS3231
Addr 0x68
AR_SCL
AR_SDA
BAT1
GND
VCC3V3
AR_SDA
AR_SCL
U3
SDA
SCL
OS
GND
VCC
A0
A1
A2
LM75BDP
Addr 0x48
C20 0.1uF
GND
GND