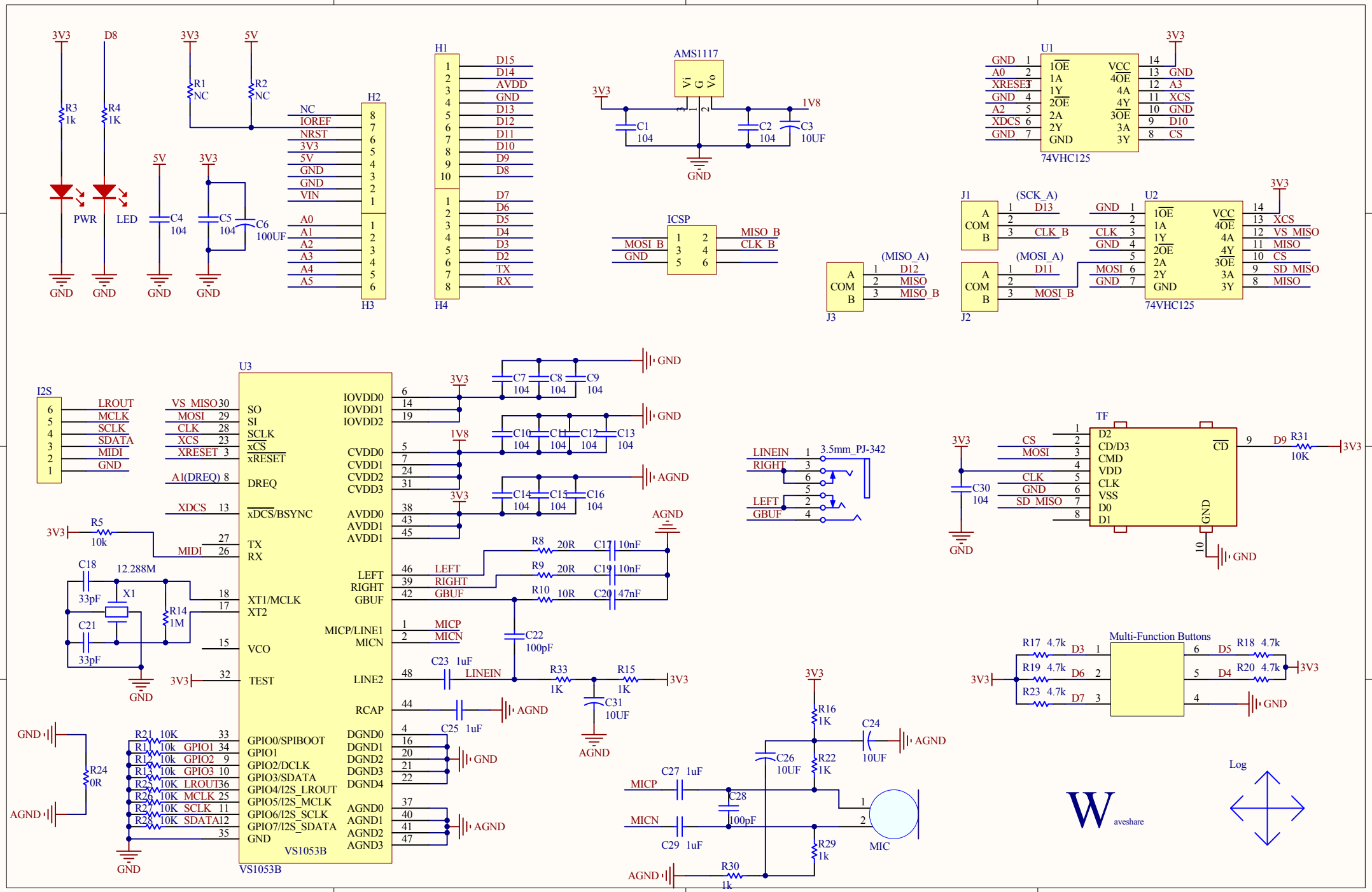

3V3
D8
R3 1k
R4 1K
PWR
LED
GND
5V
C4 104
C5 104
C6 100UF
R1 NC
R2 NC
NC
IOREF
NRST
3V3
5V
GND
GND
VIN
A0
A1
A2
A3
A4
A5
H2
H3
H1
H4
D15
D14
AVDD
GND
D13
D12
D11
D10
D9
D8
D7
D6
D5
D4
D3
D2
TX
RX
AMS1117
Vi
G
Vo
C1 104
C2 104
C3 10UF
1V8
ICSP
MOSI_B
MISO_B
CLK_B
U1
74VHC125
GND
A0
XRESET
A2
XDCS
1OE
1A
1Y
2OE
2A
2Y
VCC
4OE
4A
4Y
3OE
3A
3Y
A3
XCS
D10
CS
J1
J2
J3
(SCK_A)
(MOSI_A)
(MISO_A)
D13
D11
D12
MISO
MISO_B
U2
XCS
VS_MISO
MISO
SD_MISO
U3
VS1053B
SO
SI
SCLK
xCS
xRESET
DREQ
xDCS/BSYNC
TX
RX
XT1/MCLK
XT2
VCO
TEST
GPIO0/SPIBOOT
GPIO1
GPIO2/DCLK
GPIO3/SDATA
GPIO4/I2S_LROUT
GPIO5/I2S_MCLK
GPIO6/I2S_SCLK
GPIO7/I2S_SDATA
GND
IOVDD0
IOVDD1
IOVDD2
CVDD0
CVDD1
CVDD2
CVDD3
AVDD0
AVDD1
AVDD1
LEFT
RIGHT
GBUF
MICP/LINE1
MICN
LINE2
RCAP
DGND0
DGND1
DGND2
DGND3
DGND4
AGND0
AGND1
AGND2
AGND3
I2S
LROUT
MCLK
SCLK
SDATA
MIDI
VS_MISO
MOSI
CLK
XCS
XRESET
A1(DREQ)
XDCS
MIDI
R5 10k
C18 33pF
X1 12.288M
C21 33pF
R14 1M
R21 10K
R11 10k
R12 10k
R13 10k
R25 10K
R26 10K
R27 10K
R28 10K
GPIO1
GPIO2
GPIO3
LROUT
MCLK
SCLK
SDATA
R24 0R
AGND
C7 104
C8 104
C9 104
C10 104
C11 104
C12 104
C13 104
C14 104
C15 104
C16 104
R8 20R
R9 20R
R10 10R
C17 10nF
C19 10nF
C20 47nF
C22 100pF
C23 1uF
C25 1uF
R33 1K
R15 1K
C31 10UF
LINEIN
R16 1K
R22 1K
C24 10UF
C26 10UF
C27 1uF
C28 100pF
C29 1uF
R29 1k
R30 1k
MIC
LINEIN
RIGHT
LEFT
GBUF
3.5mm_PJ-342
TF
D2
CD/D3
CMD
VDD
CLK
VSS
D0
D1
CD
D9
R31 10K
C30 104
Multi-Function Buttons
R17 4.7k
R19 4.7k
R23 4.7k
D3
D6
D7
D5
D4
R18 4.7k
R20 4.7k
Log
W aveshare